GateKeeper Installation

Mechanical and electrical installation, and electronic programming of the GateKeeper Operator and Control Box is easy.

Mechanical

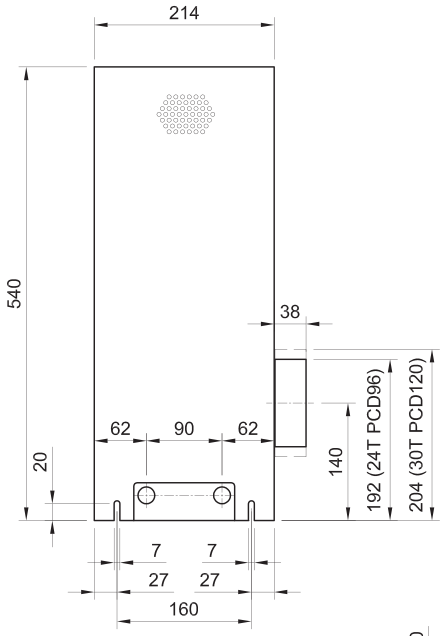

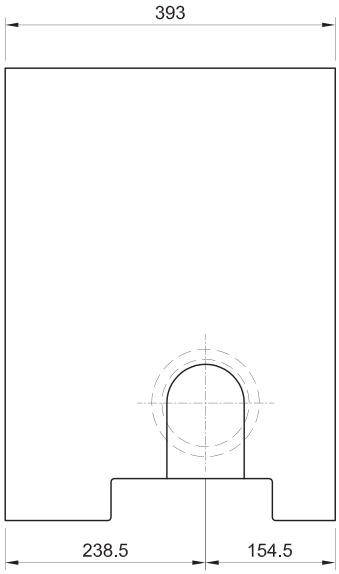

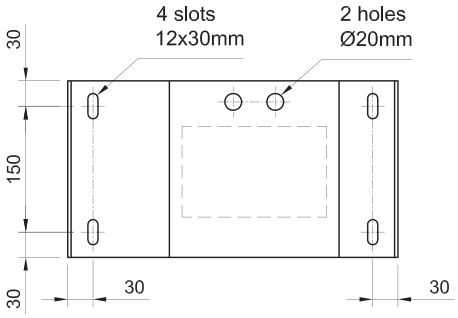
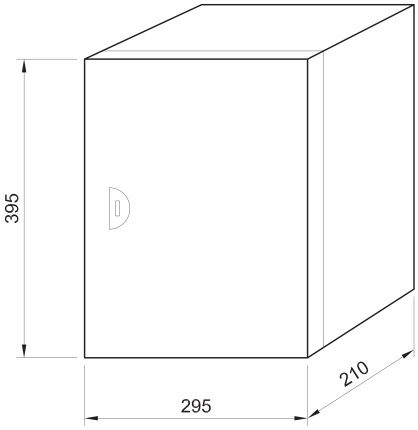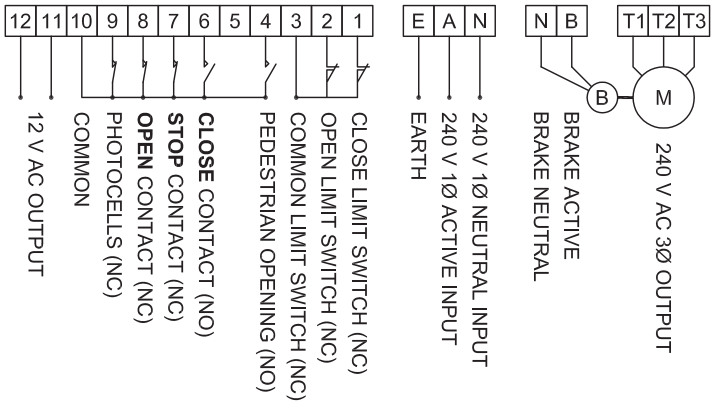
Electrical